NO.	DESCRIPTION	NUMBER	QTY	REMARKS
1	RAMP BOX	RAMP-B7004175	1	*
2	RAMP SLOPE	RAMP-B7004176	1	*

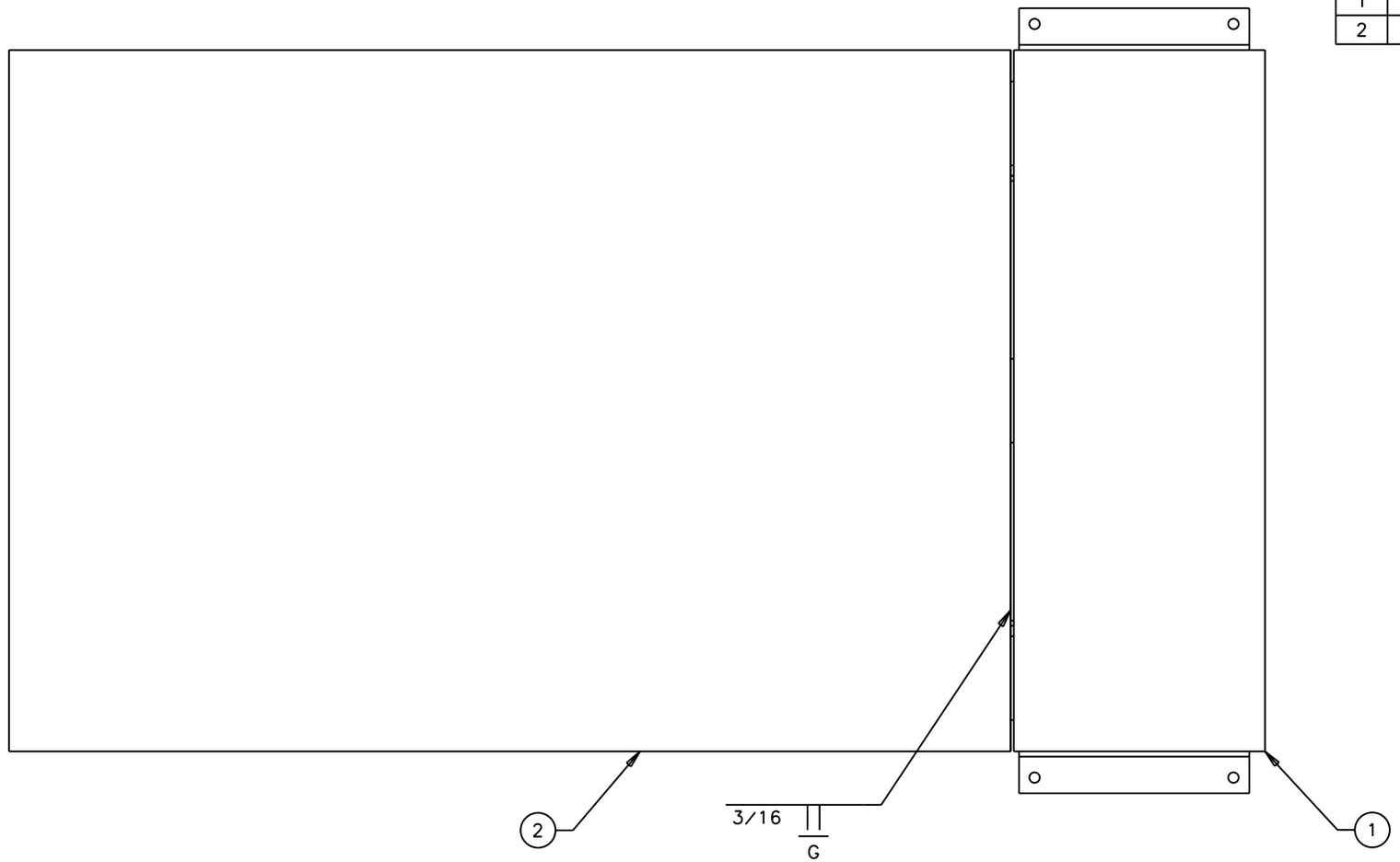

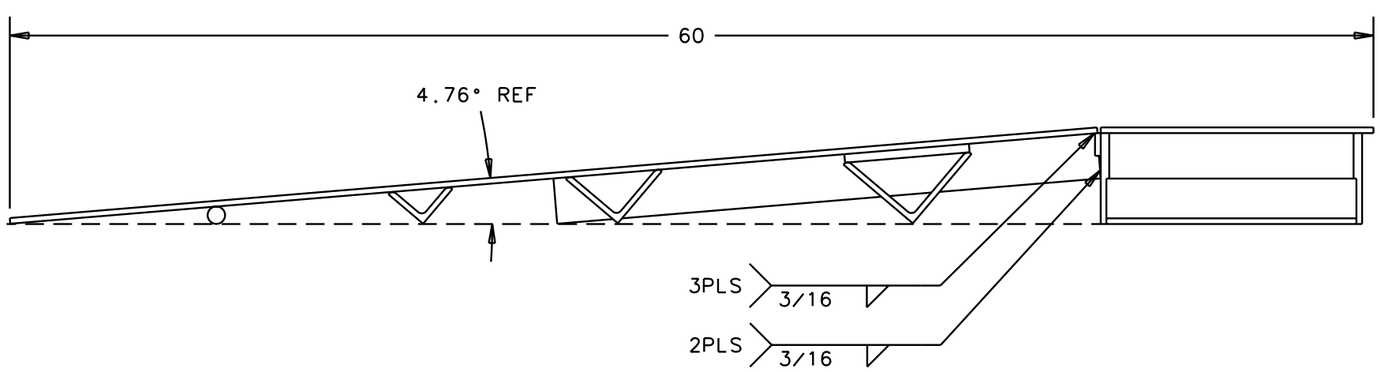

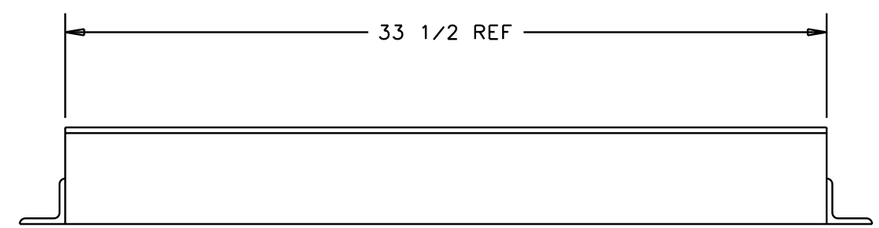

UNLESS OTHERWISE SPECIFIED
ALL DIMENSIONS ARE IN INCHES.
TOLERANCES ARE:

FRACTIONS	DECIMALS	ANGLES
±1/16	.xx ±.03	± 2°
	.xxx ±.010	

SURFACE FINISH: 125
DEBURR ALL SHARP CORNERS.

PROPRIETARY DESIGN RIGHTS RESERVED BY BISHAMON INDUSTRIES INC.

Bishamon
Better by Design®

5651 E. FRANCIS ST.
ONTARIO, CA 91761

CHECKED BY:	DRAWN BY:	NAME:
*	BC	LX-200 RAMP (33.5 x 60)
SHEET: 1 OF 1	SCALE: NTS	
DATE: 2-23-98		NUMBER: RAMP-B7000530